This simple Transformers Bumblebee paper model template was on Cinemags magazine on July edition 2011 as a bonus. Actually I never intend to share this, until one of my Facebook friend asked me for permission to build this robot alien and he said he got the file from a foreign site. I thought this is not right, so I decided to share it with you all so the source of this template can still be trace, it is from a magazine bonus. Cinemags is a monthly movie magazine here in Indonesia. This template I shared with you here is slightly bigger than in the magazine bonus. This is not the first time I share a magazine bonus that I've design, the first was a Maxim girl paper craft from MAXIM Indonesia magazine. Enjoy the model. Hahaha you know? I just remember about one post in 9Gag about how society thought about what us been doing as modelers, Enjoy the model? if you know what I mean. I mean enjoy the template of this paper model hehehe.

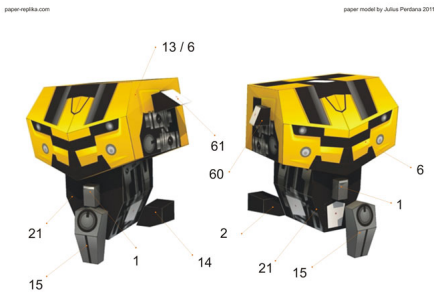

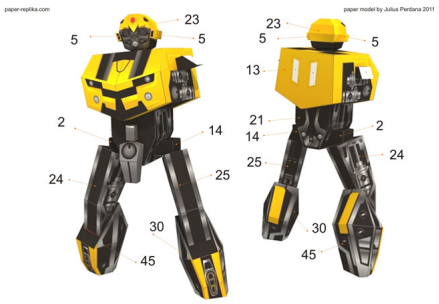

paper-replika.com
paper model by Julius Perdana 2011
31
35
32
63
34
31
41
41
42
33
42
33
BUMBLEBEE

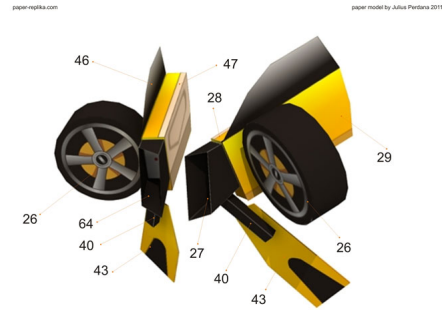
paper-replika.com
paper model by Julius Perdana 2011
46
47
28
29
26
64
40
43
27
40
43
26

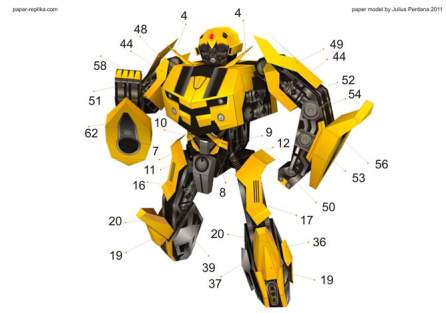
paper-replika.com
paper model by Julius Perdana 2011
4
4
48
44
58
51
62
10
7
11
16
8
20
19
20
39
37
9
12
49
44
52
54
56
53
50
17
36
19

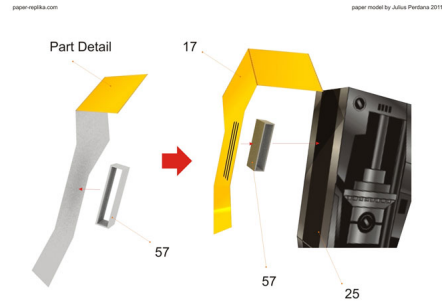
paper-replika.com
paper model by Julius Perdana 2011
Part Detail
17
57
57
25

{youtube}xFuSTkEu-K0{/youtube}

You must agree on Document License agreement page first, choose agree on the radio button then you will proceed
Download

Open the PDF file with Adobe Acrobat (recommended software)
PDF security password : paper-replika.com

{googleAds}<script type="text/javascript"><!--
google_ad_client = "pub-4564746141429405";
/* 468x60, created 7/15/10 */

google_ad_slot = "2176227363";
google_ad_width = 468;
google_ad_height = 60;
//-->
</script>
<script type="text/javascript"
src="http://pagead2.googlesyndication.com/pagead/show_ads.js">

</script>{/googleAds}

Transformers Bumblebee Paper Model (Simple) template - download

Transformers Bumblebee Paper Model (Simple) template resized 3X - download