I use a different color scheme for Axioo Mecha Unit 01 paper craft template kit, I change it into urban camo color scheme. I also modify his cannon, with three barreled cannon. Axioo Mecha Unit is a sponsored papercraft from Axioo Id to promote their Axioo VIGO 410 "The phone for every scene" smart phone and Axioo PICOpad a touchscreen tablet, both use Google Android operating system. There is a competition involving this template, you can visit the competition details here or visit Axioo Id Facebook page

Even my design is not exactly looks like Google Android but portions of this robot are modifications based on work created and shared by Google and used according to terms

described in the Creative Commons 3.0 Attribution License
.
Android Brand Guidelines

ASSEMBLY INSTRUCTIONS

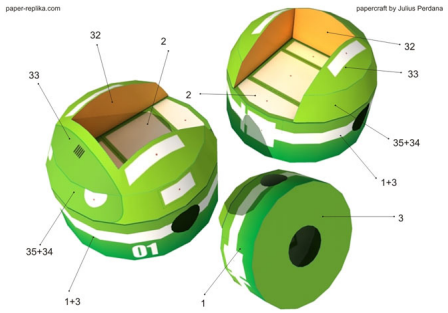

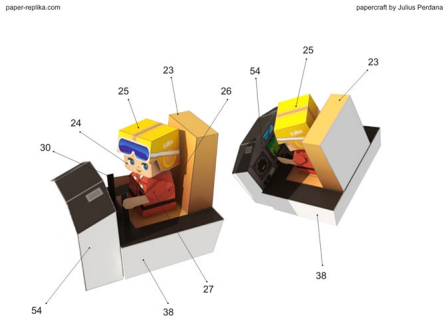

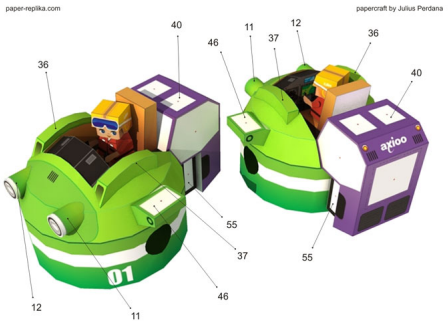

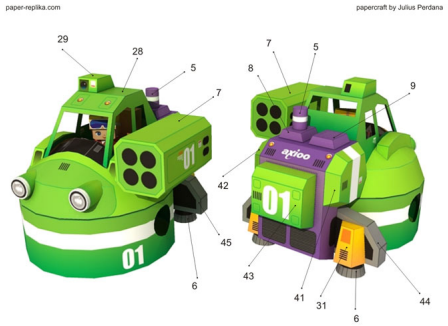
paper-replika.com
papercraft by Julius Perdana
29
28
5
7
42
45
6
7
5
8
9
43
41
31
6
44

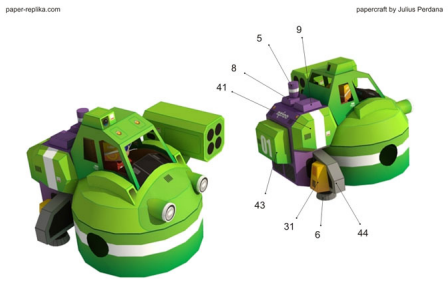
paper-replika.com
papercraft by Julius Perdana
5
9
8
41
43
31
6
44

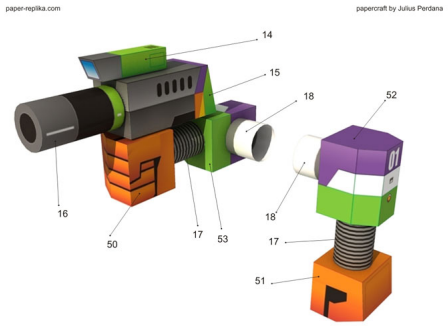
paper-replika.com
papercraft by Julius Perdana
14
15
18
52
16
50
17
53
18
17
51

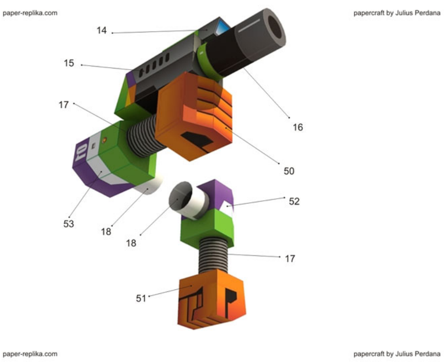

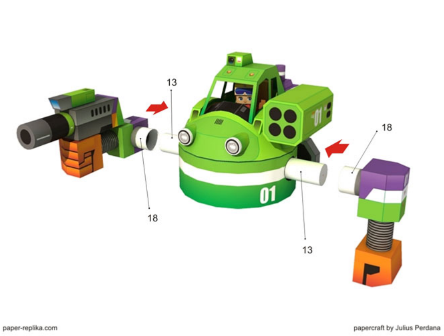

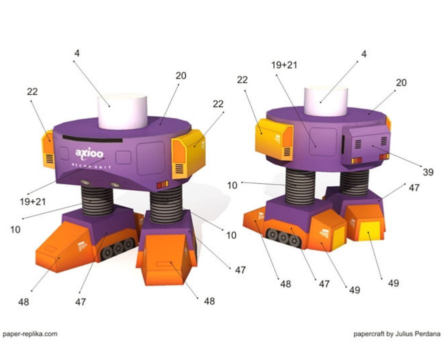

[Axioo Mecha Unit Papercraft Template (Urban Camo Version)] ... js > ... choose agree on the radio button